Hanwha Vision

Network | Thermal

TNO-C3052T

KI-Wärmebildkamera mit Teleobjektiv (QVGA)

Key Features

- QVGA-Auflösung (384x288, 17 m)
- Teleobjektiv 19 mm (Zubehör)
- Hochleistungswärmeempfindlichkeit (NETD 20 MK bei 25 °C)
- KI-basierte Objektklassifizierung (Person/Fahrzeug)
- Max. 8 Bilder/s (H.265/H.264/MJPEG)
- IP66/67, IK10, NEMA4X, NEMA-TS2, MIL-STD-810H
- Secure Element mit FIPS 140-3 Level 3, CC EAL6+

Compatible Devices

SBP-140CMB

SBP-180CMB

SBP-180CMS

SBP-150CMP

SBP-300CMP

SBP-900CMP

SBP-C15H

SBP-C15NP

SBP-C35H

SBP-C15P

SBP-150CMI

SBP-300CMI

SBP-300CMW1

SBP-300CMTW

SBP-300CMTS

SBP-250WMW

SBP-400WMW

SBP-115PFA

SBP-150PMW

SBD-180PMW

SBP-156KMW

SBP-156LMW1

SBP-050NBW

SBP-150NBW

SBP-060BA

SBP-300WMW

SBP-300WMW1

Design and specifications are subject to change without notice. The latest product information / specification can be found at HanwhaVision.com
Hanwha Vision is formerly known as Hanwha Techwin.

© Hanwha Vision CO., LTD. All rights reserved.

SBP-160WMW1

SBP-300BW1

SBP-300PMW2

SBP-300KMW1

SBP-300LMW

SBP-300NBW

Design and specifications are subject to change without notice. The latest product information / specification can be found at HanwhaVision.com
Hanwha Vision is formerly known as Hanwha Techwin.

© Hanwha Vision CO., LTD. All rights reserved.

TNO-C3052T

KI-Wärmebildkamera mit Teleobjektiv (QVGA)

Specifications

Video

Bildgebungsgerät	Typ	Uncooled micro bolometer (384x288)
Auflösung		768x576, 384x288
Max. Framerate	H.265/H.264	8fps
	MJPEG	8fps
Spektralbereich		8~14㎛
NETD		≤20mK@25°C, F1.0
Pixelgröße		17㎛
Video-Ausgang		USB: Micro USB Type B

Linse

Brennweite (mm)		19
Max. Öffnungsverhältnis (F-Zahl)	Weit	1.0
Winkel-Sichtfeld	Horizontal	19.3°
	Vertikal	14.6°
	Diagonal	23.9°
iFoV		0.895 mRad
Min. Objektabstand		10.6m(34.8ft)
Fokussteuerung		Fixed
Linsentyp		Athermalized

Schwenken / Neigen / Drehen

Schwenk- / Neigungs- / Drehbereich	Schwenken	0°~350°
	Neigen	0°~90°
	Drehen	0°~350°

Operativ

Bewegungserkennung	Menge	8ea
	Form	8point Polygonal zones

Design and specifications are subject to change without notice. The latest product information / specification can be found at HanwhaVision.com
Hanwha Vision is formerly known as Hanwha Techwin.

© Hanwha Vision CO., LTD. All rights reserved.

Operativ

Datenschutzmaskierung	Menge	6ea
	Form	Rectangular zones
	Farbe / Option	Gray, Black, White
Videodrehung		Flip, Mirror, Hallway view(90°/270°)
Serielle Schnittstelle		RS-485
Alarmschnittstelle	Eingang/Ausgang	2 configurable I/O ports
	Andere	Support extra alarm I/O via optional I/O box
Alarmauslöser		Analytics, Network disconnect, Alarm input, Time schedule, MQTT subscription
Alarmereignisse beim Auftreten eines Alarmauslösers		File upload(image): e-mail/FTP/SFTP, File upload(video clip): FTP/SFTP, Notification: e-mail, Recording: SD/SDHC/SDXC or NAS recording at event triggers,Alarm output, Handover: PTZ preset, MQTT: publication
Audioeingang		Selectable(mic in/line in)
Audioausgang		Line out
Farbpaletten		Whitehot, Blackhot, Rainbow, Rainbow2, Sepia, Red, Iron, Custom

Analysen

Klassifizierter Objekttyp		Person, Vehicle
Vorschaubild		BestShot
Analyseereignisse	Basierend auf KI-Engine	Object detection, Virtual line(Crossing/Direction), Virtual area(Loitering/Intrusion/Enter/Exit), Motion detection
	Normal	Motion detection, Tampering, Audio detection, Sound classification, Shock detection, Virtual area(Appear/Disappear)

Radiometrie

Hybrid-Paletten	Support
ROI-Zustandsüberwachung	None, Increase, Decrease

Netzwerk

Ethernet		Metal shielded RJ-45(10/100/1000BASE-T)
Videokomprimierung		H.265/H.264: Main/Baseline/High, MJPEG
Audiokomprimierung		G.711 u-law /G.726 selectable,G.726(ADPCM) 8kHz,G.711 8kHz, G.726: 16kbps,24kbps,32kbps,40kbps, AAC-LC: 48kbps at 16kHz
Intelligenter Codec		Manual, WiseStream II , WiseStream III
Bitratenkontrolle		H.265/H.264: CBR or VBR, MJPEG: VBR
Streaming	Unicast	Up to 20 users
	Multicast	Support
	Mehrfach-Streaming	Up to 10 profiles

Design and specifications are subject to change without notice. The latest product information / specification can be found at HanwhaVision.com
Hanwha Vision is formerly known as Hanwha Techwin.

© Hanwha Vision CO., LTD. All rights reserved.

Netzwerk

Protokoll		IPv4, IPv6, TCP/IP, UDP/IP, RTP(UDP), RTP(TCP), RTCP, RTSP, NTP, HTTP, HTTPS, SSL/TLS, DHCP, FTP, SFTP, SMTP, ICMP, IGMP, SNMPv1/v2c/v3(MIB-2), ARP, DNS, DDNS, QoS, UPnP, Bonjour, LLDP, CDP, SRTP(TCP, UDP Unicast), MQTT, Syslog
Anwendungsprogrammierschnittstelle	ONVIF	S, G, T, M
	Andere	SUNAPI(HTTP API), Hanwha Vision Open Platform

Sicherheit

Betriebssystem- / Firmware-Schutz	Encrypted firmware, Secure boot, Signed firmware
Benutzerauthentifizierung	Digest authentication, Prevent brute-force attack
Netzwerkauthentifizierung	IEEE 802.1X(EAP-TLS, EAP-LEAP, EAP-PEAP, MSCHAPv2)
Sichere Kommunikation	HTTPS, WSS(WebSocket Secure), SRTP
Zugangskontrolle	IP-based access control
Datenschutz	Encryption credentials, Encrypt compress for live recording file export
Audit	Access / System / Event Log management
Geräte-ID	Device certificate(Hanwha Vision Root CA)
Sichere Speicherung	SDcard partition encrypt(AES-256), Secure element
Sicherheitszertifikat	Secure element(FIPS 140-3 level3, CC EAL6+)

Allgemein

Speicher	RAM	2GB
	Flash	512MB
Edge Storage	Micro SD/SDHC/SDXC	Max. 1TB x 1slot

Umwelt & Elektrik

Betriebsbedingung	Temperatur	-40°C~+60°C(-40°F~+140°F)
	Luftfeuchtigkeit	0~95% RH(non-condensing)
Lagerbedingung	Temperatur	-50°C~+60°C(-58°F~+140°F)
	Luftfeuchtigkeit	0~95% RH(non-condensing)
Eingangsspannung		PoE(IEEE802.3af, Class3), 12VDC
Stromverbrauch	PoE	Max. 10.8W, typical 9W
	12 VDC	Max. 9.4W, typical 7.7W

Mechanisch

Farbe	White
Material	Aluminum
RAL-Code	RAL9003
Produktabmessungen	ø93.8x233.5mm(ø3.69x9.19")
Produktgewicht	1730g(3.81lb)
Kompatible Leitungsbohrung	Support conduit compatibility via optional adaptor

Design and specifications are subject to change without notice. The latest product information / specification can be found at HanwhaVision.com
Hanwha Vision is formerly known as Hanwha Techwin.

© Hanwha Vision CO., LTD. All rights reserved.

Mechanisch

Kompatible Gang-Box	Single, Double, 4" Octagon, Square

Zertifizierungen & Standards

EMV	FCC 47 CFR 15 Subpart B Class A, CE/UKCA - EN55032 Class A, EN 50130-4, EN 61000-3-2, EN 61000-3-3, VCCI CISPR 32 Class A, RCM AS-NZS CISPR 32 Class A, KS C 9832 Class A, KS C 9835, IC Regulation ICES-003 Issue 7 Class A
Sicherheit	UL 62368-1, CAN/CSA C22.2 NO. 62368-1
Umwelt	IEC/EN 63000, IEC 60529 IP66, IEC 60529 IP67, IEC 62262 IK10, NEMA TS 2-2013 (2.2.7, 2.2.8, 2.2.9), NEMA 250 type 4X, IEC 60068-2-1, IEC 60068-2-2, IEC 60068-2-6, IEC 60068-2-14, IEC 60068-2-27, IEC 60068-2-78, MIL-STD-810H 501.7, MIL-STD-810H 502.7, MIL-STD-810H 507.6, MIL-STD-810H 509.7, MIL-STD-810H 514.8, MIL-STD-810H 516.8

DRI (Johnson's Criteria)

Detection	Person(1.67PPM)	678m(2,223ft)
	Vehicle(0.65PPM)	1,731m(5,680ft)
Recognition	Person(6.67PPM)	169m(556ft)
	Vehicle(2.61PPM)	433m(1,420ft)
Identification	Person(13.33PPM)	85m(278ft)
	Vehicle(5.22PPM)	216m(710ft)

Design and specifications are subject to change without notice. The latest product information / specification can be found at HanwhaVision.com
Hanwha Vision is formerly known as Hanwha Techwin.

© Hanwha Vision CO., LTD. All rights reserved.

TNO-C3052T

KI-Wärmebildkamera mit Teleobjektiv (QVGA)

CAD

Unit: mm [inch]

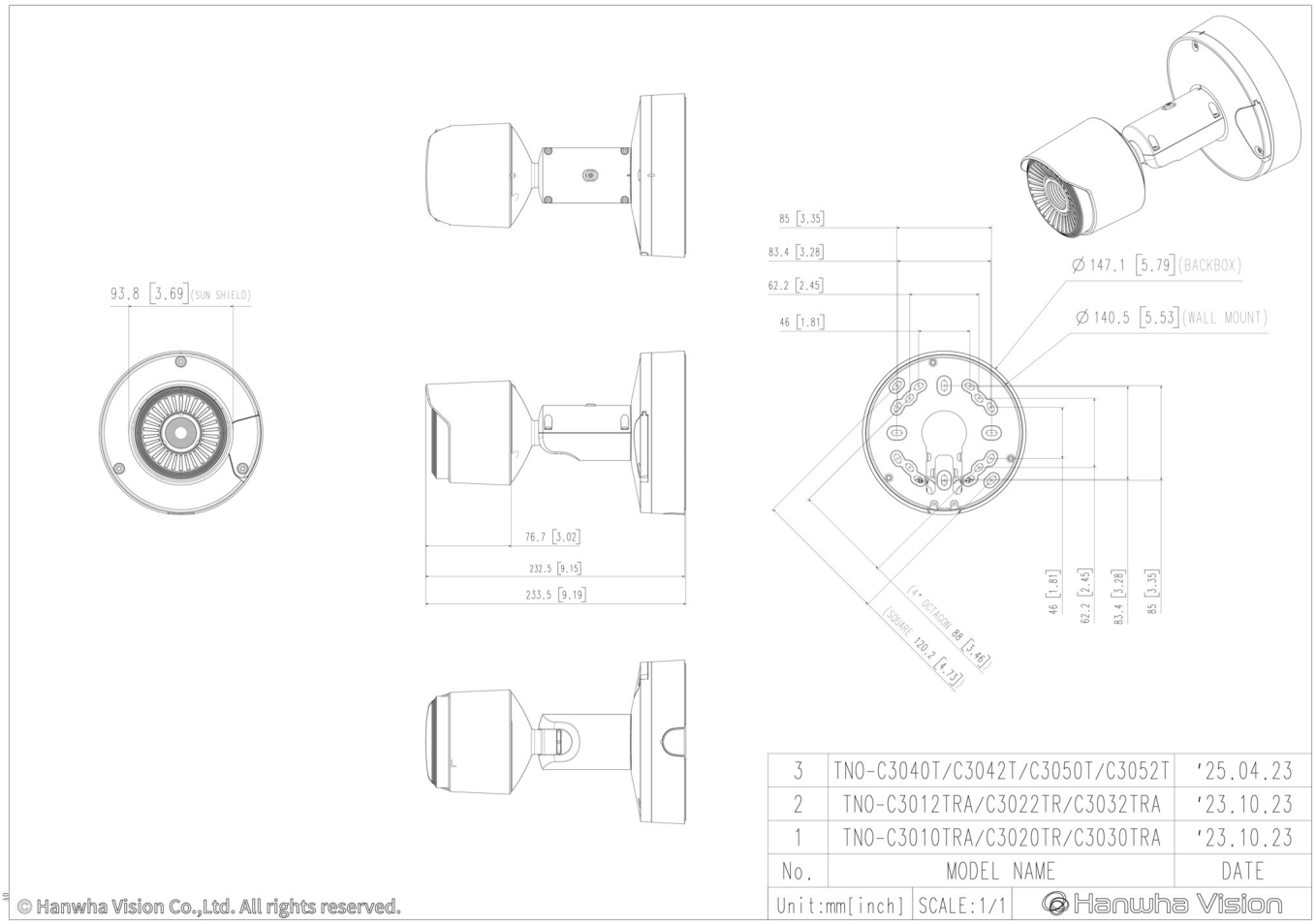

Design and specifications are subject to change without notice. The latest product information / specification can be found at HanwhaVision.com
Hanwha Vision is formerly known as Hanwha Techwin.

© Hanwha Vision CO., LTD. All rights reserved.